Diritti riservati All rights reserved

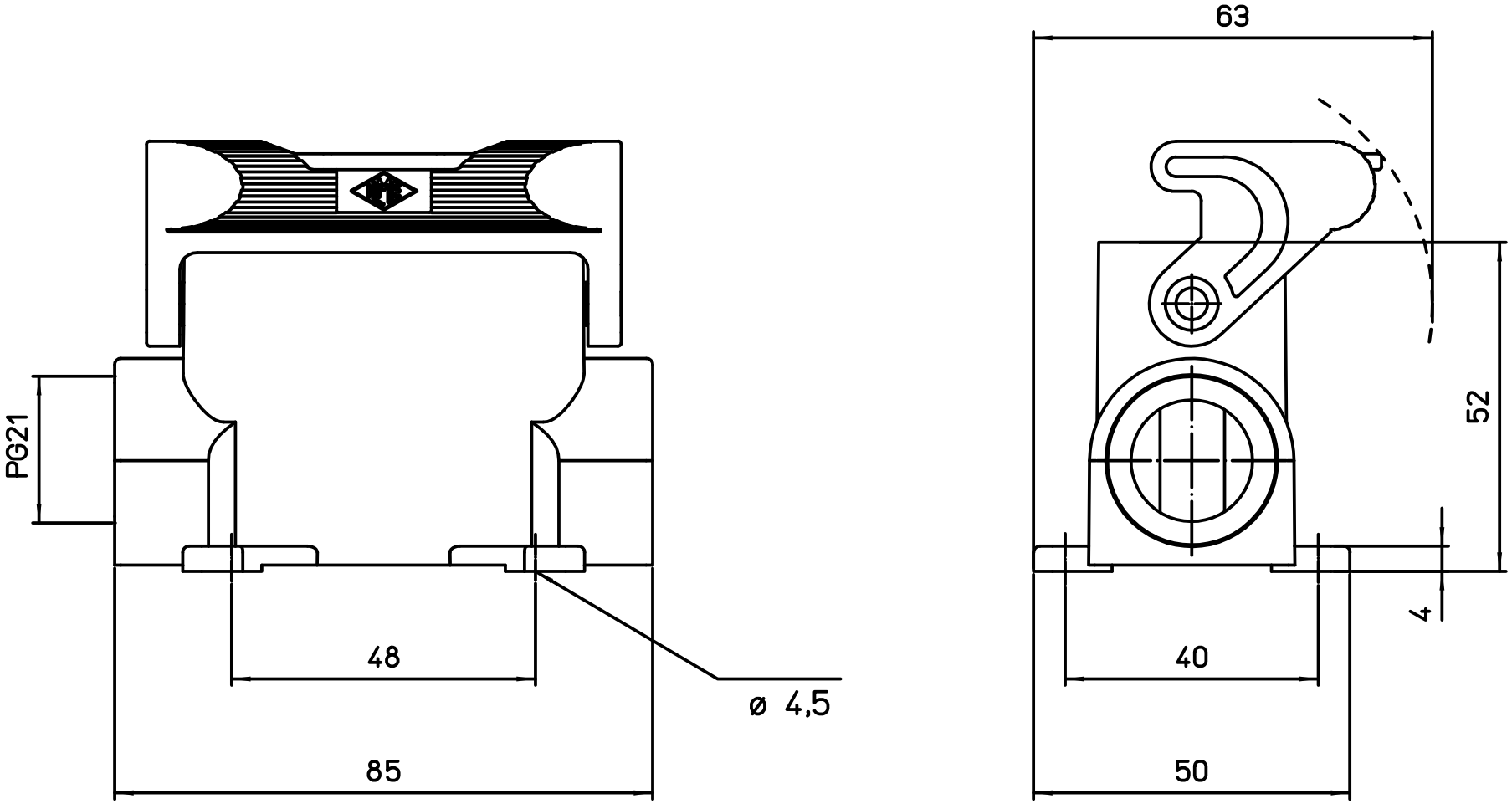

dimensions in mm	JPP 15 L21	Scale
Date 14/05/15	Surface mounting housing 1 lev. PG21 - JEI	1:1
Sign. M.Pezzimenti		